Robotics 1

Midterm Test — November 15, 2023 [total 100 points]

Exercise 1 [10 points]

Consider the orientation obtained by a (partial) Euler sequence with a rotation of an angle α around $\boldsymbol{z}$, followed by a rotation of an angle β around the current $\boldsymbol{y}$. Find three angles ϕ, χ, and ψ such that the product $\boldsymbol{R_x}(\phi)\boldsymbol{R_y}(\chi)\boldsymbol{R_z}(\psi)$ returns the same final orientation. Give the procedure for solving this problem in general, determine the singular cases, and provide then a numerical value of the sought triple of angles when $\alpha = \pi/4$, $\beta = -\pi/3$ [rad]. Check the result.

Exercise 2 [10 points]

Let a first rotation be defined by an angle γ around $\boldsymbol{x}$, followed by a rotation of an angle δ around the unit vector $\boldsymbol{v} = (1/\sqrt{2}, -1/\sqrt{2}, 0)$ expressed in the original frame. Determine the resulting rotation matrix $\boldsymbol{R}(\gamma, \delta)$ in symbolic form. For a numerical case with $\gamma = -\pi/2$, $\delta = \pi/3$ [rad], extract the invariant axis $\boldsymbol{r}$ of the total rotation and the corresponding angle θ. Check the result.

Exercise 3 [10 points]

Consider the 2R planar robot in Fig. 1, with $L_1 = 1$, $L_2 = 0.5$ [m]. The joint variables have a limited range: $\theta_1 \in [0, \pi/2]$, $\theta_2 \in [-\pi/2, \pi/2]$ [rad].

- Sketch the primary workspace of this robot, localizing the relevant points on its boundary.
- Indicate the region of the workspace where two inverse kinematics solutions exist.
- For each of the following five points, specify whether there are 0, 1, 2, or ∞ inverse kinematics solutions: $P_1 = (0.1, 1.5)$, $P_2 = (0.5, 1.3)$, $P_3 = (-0.4, 1.1)$, $P_4 = (1.0, 1.0)$, $P_5 = (1.0, -0.3)$ [m].

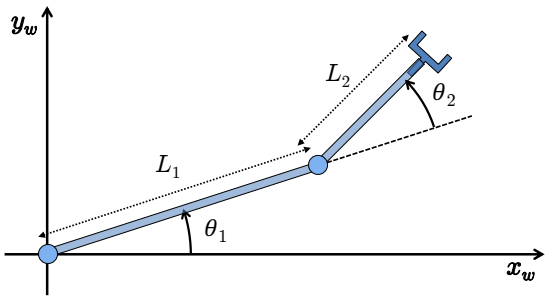

Figure 1: A 2R planar robot.

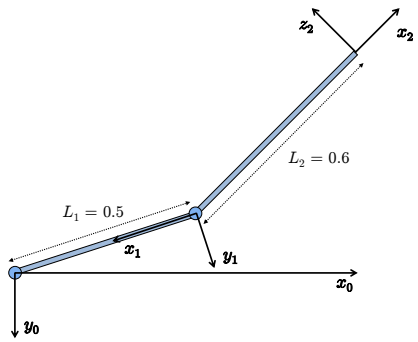

Figure 2: A 2R planar robot with D-H frames.

Exercise 4 [10 points]

Figure 2 shows an unusual but feasible choice of Denavit-Hartenberg (D-H) frames for a 2R planar robot. Provide the corresponding D-H table of parameters and the direct kinematics of this robot as an homogeneous transformation matrix ${}^0\boldsymbol{T}_2(\boldsymbol{q})$. Evaluate then this matrix in numerical form at $\boldsymbol{q}^* = (\pi/2, -\pi/2)$ [rad] and draw the robot in this configuration.

Exercise 5 [10 points]

The differential equations of a DC motor are given in slide #14 of the block 03_CompsActuators.pdf. With the motor unloaded and starting from rest, if we apply a constant armature voltage $\bar{v}_a$, the motor will start rotating and then reach a steady-state condition, with a constant angular velocity $\bar{\omega}$ and a constant produced torque $\bar{\tau}$. What are the expressions of $\bar{\omega}$ and $\bar{\tau}$ in terms of the system parameters and $\bar{v}_a$? If we attach a load with inertia $I_L > 0$ to the motor shaft through a transmission with reduction ratio $n_r > 1$ and assume no dissipative terms on the load side, will the steady-state velocity of the motor change? And what will be the velocity ω_L of the load at steady state?

Exercise 6 [20 points]

The 5R robot in Fig. 3 is shown in its zero configuration (i.e., for $\boldsymbol{q} = \boldsymbol{0}$), with indication of the positive joint rotations. Assign the D-H frames consistently with these specifications and fill the corresponding table of parameters (specifying also the signs of the non-zero constant parameters). The origin of the last D-H frame should be at point P. Evaluate then numerically the position and the orientation of the last frame at $\boldsymbol{q} = \boldsymbol{0}$, when all the non-zero kinematic lengths of the links are unitary.

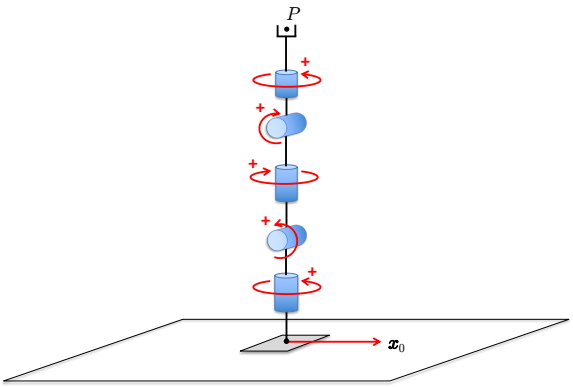

Figure 3: A 5R spatial robot at $\boldsymbol{q} = \boldsymbol{0}$.

Exercise 7 [30 points]

Consider the planar RPR robot in Fig. 4, with the first and third joint revolute and the second prismatic.

a. Determine the task kinematics $\boldsymbol{r} = \boldsymbol{f}_{\boldsymbol{r}}(\boldsymbol{q})$ for $\boldsymbol{r} = (\boldsymbol{p}, \phi)$, being $\boldsymbol{p} = (p_x, p_y) \in \mathbb{R}^2$ the position of the end-effector and $\phi \in (-\pi, \pi]$ its orientation angle with respect to $\boldsymbol{x}_0$. [*Hint: Use D-H joint variables.*]

b. Solve analytically the inverse kinematics problem for $\boldsymbol{r}_d = (p_{dx}, p_{dy}, \phi_d)$ in the regular case only.

c. Let the RPR robot have the first and third links of unitary length. The pose of its base frame RF_0 with respect to the world frame RF_w placed at the base of the 2R robot defined in Ex. 3 and shown in Fig. 1 is given by the homogeneous matrix

$$
{}^{w}\boldsymbol{T}_0 = \begin{pmatrix} {}^{w}\boldsymbol{R}_0 & {}^{w}\boldsymbol{p}_0 \\ \boldsymbol{0}^T & 1 \end{pmatrix} = \begin{pmatrix} 0.5 & -0.8660 & 0 & 1 \\ 0.8660 & 0.5 & 0 & 3 \\ 0 & 0 & 1 & 0 \\ 0 & 0 & 0 & 1 \end{pmatrix} \tag{1}
$$

When the 2R robot is at $\boldsymbol{\theta} = (0, \pi/2)$, find a configuration of the RPR robot with prismatic joint variable $q_2 > 0$ such that the end-effector of this robot has its position coincident with that of the 2R robot and the approach direction of its gripper is specified by the unit vector ${}^{w}\boldsymbol{a}_d = (0, -1, 0)$.

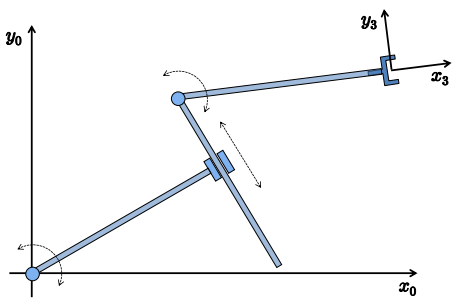

Figure 4: An RPR planar robot.

[240 minutes, open books]

Solution

November 15, 2023

Exercise 1 [10 points]

The orientation $\boldsymbol{R}(\alpha,\beta)$ obtained by the first two rotations is given by

$$\boldsymbol{R}(\alpha,\beta)=\boldsymbol{R_z}(\alpha)\boldsymbol{R_y}(\beta)=\begin{pmatrix}\cos\alpha & -\sin\alpha & 0\\ \sin\alpha & \cos\alpha & 0\\ 0 & 0 & 1\end{pmatrix}\begin{pmatrix}\cos\beta & 0 & \sin\beta\\ 0 & 1 & 0\\ -\sin\beta & 0 & \cos\beta\end{pmatrix}=\begin{pmatrix}c_\alpha c_\beta & -s_\alpha & c_\alpha s_\beta\\ s_\alpha c_\beta & c_\alpha & s_\alpha s_\beta\\ -s_\beta & 0 & c_\beta\end{pmatrix}.$$

On the other hand, the orientation obtained by the Euler sequence XYZ with angles ϕ, χ, and ψ is

$$\begin{aligned}\boldsymbol{R}_{XYZ}(\phi,\chi,\psi) &= \boldsymbol{R_x}(\phi)\boldsymbol{R_y}(\chi)\boldsymbol{R_z}(\psi)\\ &= \begin{pmatrix}1 & 0 & 0\\ 0 & \cos\phi & -\sin\phi\\ 0 & \sin\phi & \cos\phi\end{pmatrix}\begin{pmatrix}\cos\chi & 0 & \sin\chi\\ 0 & 1 & 0\\ -\sin\chi & \cos\chi & 0\end{pmatrix}\begin{pmatrix}\cos\psi & -\sin\psi & 0\\ \sin\psi & \cos\psi & 0\\ 0 & 0 & 1\end{pmatrix}\\ &= \begin{pmatrix}c_\chi c_\psi & -c_\chi s_\psi & s_\chi\\ c_\phi s_\psi + s_\phi s_\chi c_\psi & c_\phi c_\psi - s_\phi s_\chi s_\psi & -s_\phi c_\chi\\ s_\phi s_\psi - c_\phi s_\chi c_\psi & s_\phi c_\psi + c_\phi s_\chi s_\psi & c_\phi c_\chi\end{pmatrix}.\end{aligned}$$

We have to solve a standard inverse problem for this Euler sequence of angles to represent the rotation matrix $\boldsymbol{R}(\alpha,\beta)$:

$$\boldsymbol{R}_{XYZ}(\phi,\chi,\psi)=\boldsymbol{R}(\alpha,\beta). \tag{2}$$

The only peculiarity is that the assigned rotation matrix is not (yet) given in numerical form at this stage, but is parametrized by the two angles α and β. Denote the elements of matrix $\boldsymbol{R}(\alpha,\beta)$ simply by R_{ij}. From the identities in the first row and last column of the matrices in (2) one obtains

$$\chi=\mathrm{ATAN2}\left\{R_{13},\pm\sqrt{R_{11}^2+R_{12}^2}\right\}=\mathrm{ATAN2}\left\{c_\alpha s_\beta,\pm\sqrt{c_\alpha^2 c_\beta^2+s_\alpha^2}\right\}$$

We can solve then for the other two angles provided that $R_{11}^2+R_{12}^2=c_\alpha^2c_\beta^2+s_\alpha^2\neq 0$, i.e., excluding singular cases. Taking directly the + sign in the second argument of the above ATAN2 function (so that $c_\chi>0$), one has

$$\phi=\mathrm{ATAN2}\left\{-\frac{R_{23}}{c_\chi},\frac{R_{33}}{c_\chi}\right\}=\mathrm{ATAN2}\left\{-s_\alpha s_\beta,c_\beta\right\}$$

and

$$\psi=\mathrm{ATAN2}\left\{-\frac{R_{12}}{c_\chi},\frac{R_{11}}{c_\chi}\right\}=\mathrm{ATAN2}\left\{s_\alpha,c_\alpha c_\beta\right\}.$$

When substituting the numerical values $\alpha=\pi/4$ and $\beta=-\pi/3$, it is $c_\alpha^2c_\beta^2+s_\alpha^2=0.625\neq 0$; thus, we arein a regular case. The values of the three Euler angles are found then from the above expressions as

$$\phi=0.8861,\qquad \chi=-0.6591,\qquad \psi=1.1071\qquad [\mathrm{rad}].$$

Plugging these into (2), we verify that

$$\boldsymbol{R}_{XYZ}(\phi=0.8861,\chi=-0.6591,\psi=1.1071)=\boldsymbol{R}(\alpha=\pi/4,\beta=-\pi/3)=\begin{pmatrix}0.3536 & -0.7071 & -0.6124\\ 0.3536 & 0.7071 & -0.6124\\ 0.8660 & 0 & 0.5\end{pmatrix}.$$

Exercise 2 [10 points]

The orientation obtained by the two rotations around $\boldsymbol{x}$ and $\boldsymbol{v}$ is given by

$$\boldsymbol{R}(\gamma,\delta,\boldsymbol{v}) = \boldsymbol{R}_{\boldsymbol{v}}(\delta)\boldsymbol{R}_{\boldsymbol{x}}(\gamma) = \left(\boldsymbol{v}\boldsymbol{v}^T + \left(\boldsymbol{I} - \boldsymbol{v}\boldsymbol{v}^T\right)\cos\delta + \boldsymbol{S}(\boldsymbol{v})\sin\delta\right)\boldsymbol{R}_{\boldsymbol{x}}(\gamma),$$

where the reverse order of the matrix product follows from the fact that both rotations are defined with respect to fixed axes. Using the unit vector $\boldsymbol{v} = (1/\sqrt{2}, -1/\sqrt{2}, 0)$, one obtains the (semi-)symbolic matrix

$$\boldsymbol{R}(\gamma,\delta) = \begin{pmatrix} \frac{c_\delta+1}{2} & \frac{c_\delta-1}{2}c_\gamma - \frac{\sqrt{2}}{2}s_\gamma s_\delta & -\frac{c_\delta-1}{2}s_\gamma - \frac{\sqrt{2}}{2}c_\gamma s_\delta \\ \frac{c_\delta-1}{2} & \frac{c_\delta+1}{2}c_\gamma - \frac{\sqrt{2}}{2}s_\gamma s_\delta & -\frac{c_\delta+1}{2}s_\gamma - \frac{\sqrt{2}}{2}c_\gamma s_\delta \\ \frac{\sqrt{2}}{2}s_\delta & s_\gamma c_\delta + \frac{\sqrt{2}}{2}c_\gamma s_\delta & c_\gamma c_\delta - \frac{\sqrt{2}}{2}s_\gamma s_\delta \end{pmatrix}.$$

For the considered numerical case, this matrix becomes

$$\boldsymbol{R}_s = \boldsymbol{R}(\gamma = -\pi/2, \delta = \pi/3) = \begin{pmatrix} 0.75 & 0.6124 & -0.25 \\ -0.25 & 0.6124 & 0.75 \\ 0.6124 & -0.5 & 0.6124 \end{pmatrix}.$$

Being $(R_{s,12} - R_{s,21})^2 + (R_{s,13} - R_{s,31})^2 + (R_{s,23} - R_{s,32})^2 = 3.0499 \neq 0$, we are in a regular case and the inverse relationships for the axis/angle representation of this matrix yield

$$\boldsymbol{r} = \begin{pmatrix} -0.7158 \\ -0.4938 \\ -0.4938 \end{pmatrix}, \qquad \theta = 1.0617 \quad [\text{rad}].$$

and its opposite pair $(-\boldsymbol{r}, -\theta)$. It is easy to check that $\boldsymbol{R}_{\boldsymbol{r}}(\theta) = \boldsymbol{R}_{-\boldsymbol{r}}(-\theta) = \boldsymbol{R}_s$.

Exercise 3 [10 points]

Figure 5 shows the primary workspace of the 2R planar robot with the given limits of the joint ranges.

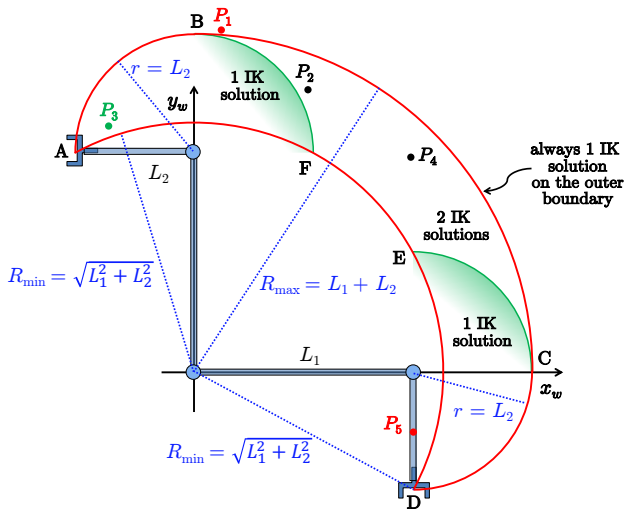

Figure 5: Primary workspace of the given 2R robot, with relevant points of interest.

The robot is shown in its two limit configurations, at $\theta = (\pi/2, \pi/2)$ and at $\theta = (0, -\pi/2)$ [rad]. The 'banana'-like workspace is limited by the four points A $= (-L_2, L_1) = (-0.5, 1)$, $B = (0, L_1+L_2) = (0, 1.5)$, C $= (L_1 + L_2, 0) = (1.5, 0)$, and D $= (L_1, -L_2) = (1, -0.5)$ (all point coordinates are all expressed in [m]). The inner boundary is an arc of a circle of radius $R_{\min} = \sqrt{L_1^2 + L_2^2} = \sqrt{1.25} = 1.1180$ [m], centered at the origin. The outer boundary is composed by three arcs of circles, two of radius $r = L_2 = 0.5$ [m], centered respectively at $(0, 1)$ (arc AB) and at $(1, 0)$ (arc CD), and one of radius $R_{\max} = L_1 + L_2 = 1.5$ [m], centered again at the origin. The workspace is symmetrically divided in three regions: there is only one solution to the inverse kinematics (IK) in the regions ABF (right arm) and ECD (left arm), including their parts of the workspace boundary, while there are two solutions (right and left arm) in the central area BCEF, with E $= (L_1, L_2) = (1, 0.5)$ and F $= (L_2, L_1) = (0.5, 1)$, including the inner arc EF on the workspace boundary and the two internal arcs BF and CE that limit this area. Finally, there is only one IK solution on the outer boundary, including the arc BC (where the arm is outstretched).

As for the points P_i, $i = 1, \ldots, 5$, it is easy to check that:

- the two points (marked in red) $P_1 = (0.1, 1.5)$ and $P_5 = (1.0, -0.3)$ are out of the workspace, since $\|\boldsymbol{p}_1\|^2 = 2.26 > 2.25 = R_{\max}^2$ and $\|\boldsymbol{p}_2\|^2 = 1.09 < 1.25 = R_{\min}^2$;
- in $P_2 = (0.5, 1.3)$ and $P_4 = (1.0, 1.0)$ (marked in black) there are two IK solutions;
- there is only one IK solution in $P_3 = (-0.4, 1.1)$ (marked in green) —the right arm solution.

Exercise 4 [10 points]

The D-H parameters corresponding to the frame assignment for the 2R planar robot shown in Fig. 2 are given in Tab. 1.

i	α_i	a_i	d_i	θ_i
1	π	$-L_1 = -0.5$	0	q_1
2	$-\pi/2$	$L_2 = 0.6$	0	q_2

Table 1: D-H parameters corresponding to the frames in Fig. 2.

From the associated homogeneous transformation matrices

$$\boldsymbol{A}_1(q_1) = \begin{pmatrix} \cos q_1 & \sin q_1 & 0 & -L_1 \cos q_1 \\ \sin q_1 & -\cos q_1 & 0 & -L_1 \sin q_1 \\ 0 & 0 & -1 & 0 \\ 0 & 0 & 0 & 1 \end{pmatrix}, \quad \boldsymbol{A}_2(q_2) = \begin{pmatrix} \cos q_2 & 0 & -\sin q_2 & L_2 \cos q_2 \\ \sin q_2 & 0 & \cos q_2 & L_2 \sin q_2 \\ 0 & -1 & 0 & 0 \\ 0 & 0 & 0 & 1 \end{pmatrix},$$

one obtains

$${}^0\boldsymbol{T}_2(\boldsymbol{q}) = \boldsymbol{A}_1(q_1)\boldsymbol{A}_2(q_2) = \begin{pmatrix} \cos(q_1 - q_2) & 0 & \sin(q_1 - q_2) & -L_1 \cos q_1 + L_2 \cos(q_1 - q_2) \\ \sin(q_1 - q_2) & 0 & -\cos(q_1 - q_2) & -L_1 \sin q_1 + L_2 \sin(q_1 - q_2) \\ 0 & 1 & 0 & 0 \\ 0 & 0 & 0 & 1 \end{pmatrix}.$$

When $\boldsymbol{q} = \boldsymbol{q}^* = (\pi/2, -\pi/2)$ [rad], for $L_1 = 0.5$ and $L_2 = 0.6$ [m], we have

$${}^0\boldsymbol{T}_2(\boldsymbol{q}^*) = \begin{pmatrix} -1 & 0 & 0 & -0.6 \\ 0 & 0 & 1 & -0.5 \\ 0 & 1 & 0 & 0 \\ 0 & 0 & 0 & 1 \end{pmatrix}.$$

This configuration of the 2R robot is shown in Fig. 6.

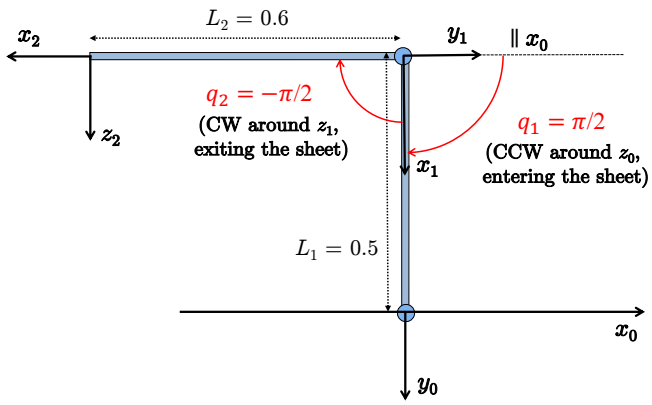

Figure 6: The 2R planar robot of Fig. 2, shown in the configuration $\boldsymbol{q}^* = (\pi/2, -\pi/2)$.

Exercise 5 [10 points]

The differential equations of a DC motor driven by an armature voltage v_a can be written in state-space format, with the two state components $\boldsymbol{x} = (i_a, \omega)$ and the input $u = v_a$, as

$$\begin{aligned} \frac{di_a}{dt} &= -\frac{R_a}{L_a}\, i_a - \frac{k_v}{L_a}\, \omega + \frac{1}{L_a}\, u \\ \frac{d\omega}{dt} &= \frac{k_t}{I_m}\, i_a - \frac{F_m}{I_m}\, \omega - \frac{1}{I_m}\, \tau_{load} \end{aligned} \tag{3}$$

having used[1] the expressions of the back electromagnetic force $v_{emf} = k_v \omega$ and of the output torque produced by the motor $\tau_m = k_t i_a$. When there is no load attached to the motor shaft ($\tau_{load} = 0$), equations (3) become in matrix form

$$\dot{\boldsymbol{x}} = \boldsymbol{A}\boldsymbol{x} + \boldsymbol{b}u, \qquad \boldsymbol{A} = \begin{pmatrix} -R_a/L_a & -k_v/L_a \\ k_t/I_m & -F_m/I_m \end{pmatrix}, \quad \boldsymbol{b} = \begin{pmatrix} 1/L_a \\ 0 \end{pmatrix}.$$

From

$$\det(\lambda \boldsymbol{I} - \boldsymbol{A}) = \det \begin{pmatrix} \lambda + R_a/L_a & k_v/L_a \\ -k_t/I_m & \lambda + F_m/I_m \end{pmatrix} = \lambda^2 + \left(\frac{R_a}{L_a} + \frac{F_m}{I_m}\right)\lambda + \frac{1}{L_a I_m}\,(R_a F_m + k_v k_t),$$

the two eigenvalues of $\boldsymbol{A}$

$$\lambda_{1,2} = -\frac{1}{2}\left(\frac{R_a}{L_a} + \frac{F_m}{I_m}\right) \pm \frac{1}{2}\sqrt{\left(\frac{R_a}{L_a} + \frac{F_m}{I_m}\right)^2 - \frac{4(R_a F_m + k_v k_t)}{L_a I_m}}$$

have negative real part since all physical constants are positive. Thus, the system is asymptotically stable and admits, in response to a constant input $u = \bar{v}_a$, a steady-state condition in which the angular velocity ω and the armature current i_a (and thus also the motor torque τ_m) are constant. The steady state $\bar{\boldsymbol{x}} = (\bar{i}_a, \bar{\omega})$ is computed by setting $u = \bar{v}_a$ and $\dot{\boldsymbol{x}} = \boldsymbol{0}$:

$$\boldsymbol{A}\bar{\boldsymbol{x}} + \boldsymbol{b}\bar{v}_a = \boldsymbol{0} \quad \Rightarrow \quad \bar{\boldsymbol{x}} = -\boldsymbol{A}^{-1}\boldsymbol{b}\,\bar{v}_a \quad \Rightarrow \quad \begin{cases} \bar{i}_a = \dfrac{F_m}{R_a F_m + k_v k_t}\,\bar{v}_a \\ \bar{\omega} = \dfrac{k_t}{R_a F_m + k_v k_t}\,\bar{v}_a. \end{cases} \tag{4}$$

[1]The two constants k_v and k_t are numerically equal when using SI units ($k_v = k_t$). They have been kept distinct here for better clarity, also because we are working only symbolically.

Accordingly, the torque produced by the motor at steady state is

$$\bar{\tau}_m = k_t \bar{i}_a = F_m \bar{\omega} = \frac{F_m k_t}{R_a F_m + k_v k_t}\, \bar{v}_a.$$

Consider now an inertial load I_L attached to the motor through a transmission with reduction ratio $n_r > 1$. Since the reflected load torque at the motor shaft is

$$\tau_{load} = \frac{1}{n_r}\left(I_L \dot{\omega}_L\right) = \frac{1}{n_r}\left(I_L \frac{\dot{\omega}}{n_r}\right) = \frac{I_L}{n_r^2}\,\dot{\omega},$$

the second differential equation in (3) becomes

$$\frac{d\omega}{dt} = \frac{k_t}{I'_m}\, i_a - \frac{F_m}{I'_m}\,\omega, \qquad \text{with } I'_m = I_m + \frac{I_L}{n_r^2}.$$

Therefore, the motor dynamics will have the same previous structure, now with a larger equivalent motor inertia I'_m. The system is still asymptotically stable, with the two eigenvalues having a negative real part smaller than before. In response to a constant $\bar{v}_a$, this implies a slower transient before reaching the steady state. However, the steady-state velocity $\bar{\omega}$ of the motor will remain the same, as apparent from its expression in (4) which is independent of I_m (and thus of I'_m). Accordingly, the steady-state velocity of the load will be

$$\bar{\omega}_L = \frac{\bar{\omega}}{n_r} = \frac{k_t}{n_r}\,\frac{\bar{v}_a}{R_a F_m + k_v k_t}.$$

Exercise 6 [20 points]

The D-H frames for the 5R robot in Fig. 3 are uniquely specified as in Fig. 7, up to the arbitrary choice of the direction of $\boldsymbol{z}_5$ (chosen here so that the last twist angle is $\alpha_5 = 0$).

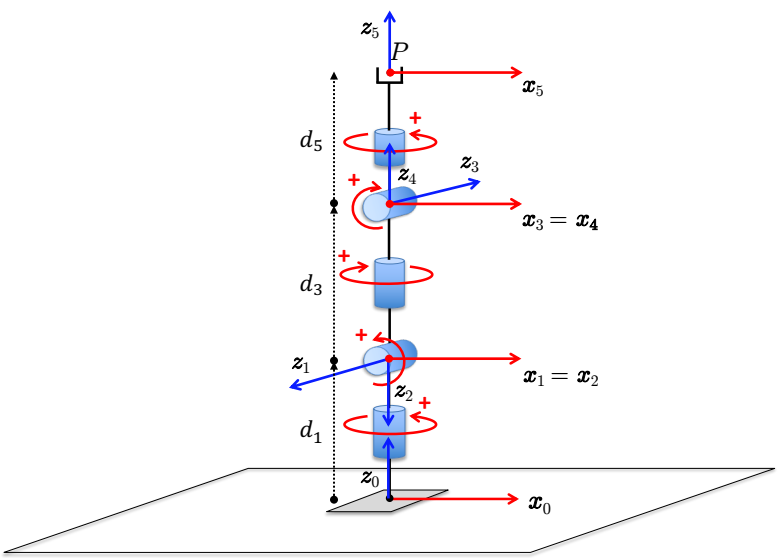

Figure 7: D-H frame assignment for the 5R robot of Fig. 3.

For $i = 0, \ldots, 4$, the directions of the $\boldsymbol{z}_i$ axes should guarantee a positive counterclockwise (CCW) rotation that is consistent with the specifications in Fig. 3. Moreover, since the robot is shown at $\boldsymbol{q} = \boldsymbol{0}$, all $\boldsymbol{x}_i$ axes, for $i = 1, \ldots, 5$, should be aligned with $\boldsymbol{x}_0$ in this configuration. The only non-zero linear parameters are $d_1 > 0$ (displacement from O_0 to O_1 along $\boldsymbol{z}_0$), $d_3 < 0$ (displacement from O_2 to O_3 along z_2), and $d_5 > 0$ (displacement from O_4 to $O_5 = P$ along z_4). The D-H parameters corresponding to this frame assignment for the 5R robot are given in Tab. 2, for the shown configuration $\boldsymbol{q} = \boldsymbol{0}$.

The (long) symbolic expression of the pose of the end-effector frame RF_5 is not requested explicitly by the text of this exercise, although it can be easily obtained using the available symbolic manipulation codes from the D-H table as

$$^0\boldsymbol{T}_5(\boldsymbol{q}) = \boldsymbol{A}_1(q_1)\boldsymbol{A}_2(q_2)\boldsymbol{A}_3(q_3)\boldsymbol{A}_4(q_4)\boldsymbol{A}_5(q_5) = \prod_{i=1}^{5} \boldsymbol{A}_i(q_i).$$

i	α_i	a_i	d_i	θ_i
1	$\pi/2$	0	$d_1 > 0$	$q_1 = 0$
2	$\pi/2$	0	0	$q_2 = 0$
3	$\pi/2$	0	$d_3 < 0$	$q_3 = 0$
4	$\pi/2$	0	0	$q_4 = 0$
5	0	0	$d_5 > 0$	$q_5 = 0$

Table 2: D-H parameters corresponding to the frames in Fig. 7.

In any event, its numerical evaluation at $\boldsymbol{q} = \boldsymbol{0}$ for unitary lengths $d_1 = d_5 = 1$ and $d_3 = -1$ (note this!) leads to

$$^0\boldsymbol{T}_5(\boldsymbol{0}) = \begin{pmatrix} 1 & 0 & 0 & 0 \\ 0 & 1 & 0 & 0 \\ 0 & 0 & 1 & 3 \\ 0 & 0 & 0 & 1 \end{pmatrix}.$$

Matrix $^0\boldsymbol{T}_5(\boldsymbol{0})$ could have been found also by visual inspection of Fig. 7. In fact, frame RF_5 is oriented as frame RF_0 (thus $^0\boldsymbol{R}_5(\boldsymbol{0}) = \boldsymbol{I}$), while its origin is on the $\boldsymbol{z}_0$ axis at a distance $D = d_1 + |d_3| + d_5 = 3$ [m] from the origin O_0.

Exercise 7 [30 points]

a. For describing the task kinematics associated to the end-effector of the RPR planar robot of Fig. 4, we can use the natural definition of joint coordinates $\boldsymbol{q} = (q_1, q_2, q_3)$ shown in Fig. 8.

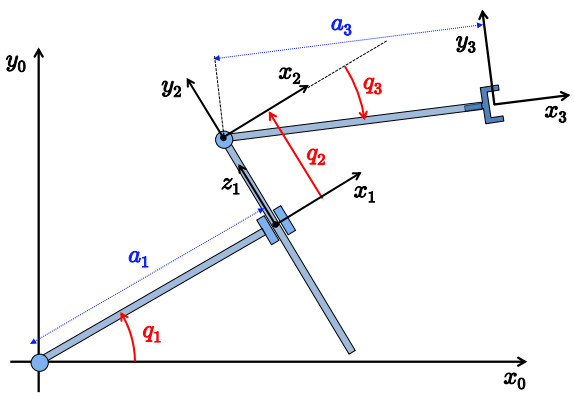

Figure 8: A natural D-H frame assignment for the RPR planar robot of Fig. 4.

We obtain

$$\boldsymbol{r} = \begin{pmatrix} p_x \\ p_y \\ \phi \end{pmatrix} = \begin{pmatrix} a_1 \cos q_1 + q_2 \cos(q_1 + \frac{\pi}{2}) + a_3 \cos(q_1 + q_3) \\ a_1 \sin q_1 + q_2 \sin(q_1 + \frac{\pi}{2}) + a_3 \sin(q_1 + q_3) \\ q_1 + q_3 \end{pmatrix}$$

$$= \begin{pmatrix} a_1 \cos q_1 - q_2 \sin q_1 + a_3 \cos(q_1 + q_3) \\ a_1 \sin q_1 + q_2 \cos q_1 + a_3 \sin(q_1 + q_3) \\ q_1 + q_3 \end{pmatrix} = \boldsymbol{f}_{\boldsymbol{r}}(\boldsymbol{q}). \tag{5}$$

The same expression (5) can also be derived by following the D-H convention. The D-H parameters associated to the frames defined in Fig. 8 are reported in Tab. 3.

i	α_i	a_i	d_i	θ_i
1	$-\pi/2$	$a_1 > 0$	0	q_1
2	$\pi/2$	0	q_2	0
3	0	$a_3 > 0$	0	q_3

Table 3: D-H parameters corresponding to the frames in Fig. 8.

From the D-H table, computing the homogeneous transformations

$$\boldsymbol{A}_1(q_1) = \begin{pmatrix} c_1 & 0 & -s_1 & a_1 c_1 \\ s_1 & 0 & c_1 & a_1 s_1 \\ 0 & -1 & 0 & 0 \\ 0 & 0 & 0 & 1 \end{pmatrix}, \ \boldsymbol{A}_2(q_2) = \begin{pmatrix} 1 & 0 & 0 & 0 \\ 0 & 0 & -1 & 0 \\ 0 & 1 & 0 & q_2 \\ 0 & 0 & 0 & 1 \end{pmatrix}, \ \boldsymbol{A}_3(q_3) = \begin{pmatrix} c_3 & -s_3 & 0 & a_3 c_3 \\ s_3 & c_3 & 0 & a_3 s_3 \\ 0 & 0 & 1 & 0 \\ 0 & 0 & 0 & 1 \end{pmatrix},$$

one obtains

$${}^0\boldsymbol{T}_3(\boldsymbol{q}) = \boldsymbol{A}_1(q_1)\boldsymbol{A}_2(q_2)\boldsymbol{A}_3(q_3) = \begin{pmatrix} c_{13} & -s_{13} & 0 & a_1 c_1 - q_2 s_1 + a_3 c_{13} \\ s_{13} & c_{13} & 0 & a_1 s_1 + q_2 c_1 + a_3 s_{13} \\ 0 & 0 & 1 & 0 \\ 0 & 0 & 0 & 1 \end{pmatrix},$$

which is consistent with (5), once the absolute angle $\phi = q_1 + q_3$ with respect to the $\boldsymbol{x}_0$ axis is extracted from the rotation matrix ${}^0\boldsymbol{R}_3(\boldsymbol{q})$.

b. The inverse kinematics problem for $\boldsymbol{r} = \boldsymbol{r}_d = (p_{dx}, p_{dy}, \phi_d)$ is solved as follows. From the third equation in (5) one has $q_1 + q_3 = \phi_d$. Substituting this argument in the trigonometric functions within the first two equations, one obtains

$$\begin{pmatrix} p_{dx} - a_3 c_{\phi_d} \\ p_{dy} - a_3 s_{\phi_d} \end{pmatrix} = \begin{pmatrix} a_1 c_1 - q_2 s_1 \\ a_1 s_1 + q_2 c_1 \end{pmatrix}. \tag{6}$$

Squaring and summing these two equations yields

$$(p_{dx} - a_3 c_{\phi_d})^2 + (p_{dy} - a_3 s_{\phi_d})^2 = a_1^2 + q_2^2,$$

from which we have the two solutions for the prismatic joint

$$q_2^{[+,-]} = \pm\sqrt{(p_{dx} - a_3 c_{\phi_d})^2 + (p_{dy} - a_3 s_{\phi_d})^2 - a_1^2} = \pm\sqrt{p_{dx}^2 + p_{dy}^2 + a_3^2 - 2a_3(p_{dx} c_{\phi_d} + p_{dy} s_{\phi_d}) - a_1^2}, \tag{7}$$

provided that the argument of the square root is strictly positive (regular case). If this argument is zero, the two solutions collapse into one (singular case); if it is negative, there is no solution to the inverse kinematics problem. In the regular case, for each of the two solutions $q_2^{[+]}$and $q_2^{[-]}$ in (7) we proceed with finding q_1 through the solution of a linear system in the unknowns c_1 and s_1 obtained from (6):

$$\begin{pmatrix} a_1 & -q_2 \\ q_2 & a_1 \end{pmatrix} \begin{pmatrix} c_1 \\ s_1 \end{pmatrix} = \begin{pmatrix} p_{dx} - a_3 c_{\phi_d} \\ p_{dy} - a_3 s_{\phi_d} \end{pmatrix}. \tag{8}$$

Since the determinant of the matrix in (8) is $a_1^2 + q_2^2 > 0$, a solution (c_1, s_1) always exists and is unique. Therefore, we have

$$q_1^{[+,-]} = \text{ATAN2}\left\{a_1(p_{dy} - a_3 s_{\phi_d}) - q_2^{[+,-]}(p_{dx} - a_3 c_{\phi_d}),\, a_1(p_{dx} - a_3 c_{\phi_d}) + q_2^{[+,-]}(p_{dy} - a_3 s_{\phi_d})\right\}. \tag{9}$$

Finally, the third joint variable is obtained as

$$q_3^{[+,-]} = \phi_d - q_1^{[+,-]}. \tag{10}$$

Each of the two results (10) should be properly mapped into the interval $(-\pi, \pi]$.

c. We have to solve an inverse kinematics problem for the RPR planar robot, where the input is partly defined by the position of the end-effector of the 2R planar robot in Fig. 1. For this, in order to use the results of the previous section **b**, one has to specify the input data $\boldsymbol{r}_d = (p_{dx}, p_{dy}, \phi_d)$ in the base frame RF_0 of the RPR robot (thus, ${}^0\boldsymbol{r}_d = {}^0\boldsymbol{p}_d^T\, {}^0\phi_d)^T$). Note that, from the rotational part of matrix ${}^w\boldsymbol{T}_0$ in (1), the frame RF_0 is rotated by an angle $\beta = \pi/3$ around $\boldsymbol{z}_0$ with respect to frame RF_w.

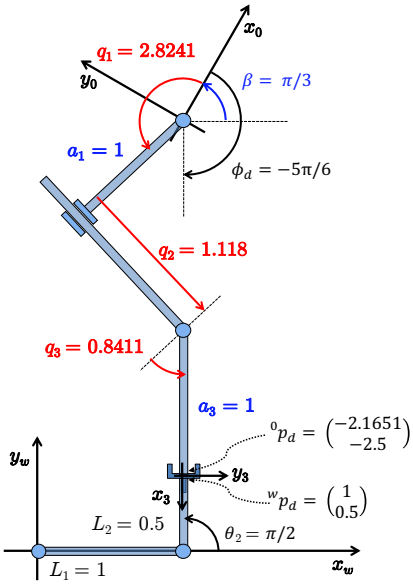

Figure 9: Solution of the inverse kinematics for the RPR robot performing the desired task.

Consider then the following two kinematic identities that hold for the required task.

1) Coincidence of the end-effector positions of the two robots RPR and 2R. This is expressed as

$${}^w\boldsymbol{T}_0\, {}^0\boldsymbol{T}_3^{\text{RPR}}(\boldsymbol{q}) \begin{pmatrix} \mathbf{0} \\ 1 \end{pmatrix} = {}^w\boldsymbol{T}_2^{\text{2R}}(\boldsymbol{\theta}) \begin{pmatrix} \mathbf{0} \\ 1 \end{pmatrix}.$$

Plugging in the given data for the 2R robot ($\boldsymbol{\theta} = (0, \pi/2)$ [rad], $L_1 = 1$ and $L_2 = 0.5$ [m]), and using eq. (1), we obtain

$$\begin{pmatrix} {}^0\boldsymbol{p}_3(\boldsymbol{q}) \\ 1 \end{pmatrix} = {}^0\boldsymbol{T}_3^{\mathrm{RPR}}(\boldsymbol{q}) \begin{pmatrix} \boldsymbol{0} \\ 1 \end{pmatrix} = {}^w\boldsymbol{T}_0^{-1}\,{}^w\boldsymbol{T}_2^{\mathrm{2R}}(0,\pi/2) \begin{pmatrix} \boldsymbol{0} \\ 1 \end{pmatrix} = {}^w\boldsymbol{T}_0^{-1} \begin{pmatrix} 1 \\ 0.5 \\ 0 \\ 1 \end{pmatrix} = \begin{pmatrix} -2.1651 \\ -1.25 \\ 0 \\ 1 \end{pmatrix} = \begin{pmatrix} p_{dx} \\ p_{dy} \\ 0 \\ 1 \end{pmatrix}.$$

2) Orientation in the plane of the approach vector ${}^0\boldsymbol{x}_3^{\mathrm{RPR}}$ of the gripper (see Fig. 8). The angle ϕ_d is extracted from

$${}^w\boldsymbol{R}_0\,{}^0\boldsymbol{R}_3^{\mathrm{RPR}}(\boldsymbol{q}) \begin{pmatrix} 1 \\ 0 \\ 0 \end{pmatrix} = {}^w\boldsymbol{a}_d.$$

Using ${}^w\boldsymbol{a}_d = (0,-1,0)$, one has

$${}^0\boldsymbol{x}_3(\boldsymbol{q}) = {}^0\boldsymbol{R}_3^{\mathrm{RPR}}(\boldsymbol{q}) \begin{pmatrix} 1 \\ 0 \\ 0 \end{pmatrix} = {}^w\boldsymbol{R}_0^T\,{}^w\boldsymbol{a}_d = \begin{pmatrix} -0.8660 \\ -0.5 \\ 0 \end{pmatrix} = \begin{pmatrix} \cos\phi_d \\ \sin\phi_d \\ 0 \end{pmatrix}.$$

Thus, the orientation angle of ${}^0\boldsymbol{x}_3$ is given by $\phi_d = \mathrm{ATAN2}\,\{-0.5,-0.8660\} = -5\pi/6 = -2.6180$ [rad].

The (two) configurations of the RPR robot that solve the task are obtained by substituting the obtained data p_{dx}, p_{dy}, and ϕ_d into eqs. (7), (9), and (10), using also $a_1 = a_3 = 1$ [m]. The solution with a positive value for the prismatic joint variable q_2 is

$$q_1 = 2.8241, \qquad q_2 = 1.1180, \qquad q_3 = 0.8411 \qquad \text{[rad,m,rad]}. \tag{11}$$

The configurations of the RPR robot and of the 2R robot associated to this solution is shown in Fig. 9.

Note finally that a direct computation of the solution angle for the third joint as

$$q_3 = \phi_d - q_1 = -2.6180 - 2.8241 = -5.4421 \text{ [rad]}$$

returns a value outside the interval $(-\pi,\pi]$. Instead, the correct value $q_3 \in (-\pi,\pi]$ in (11) is obtained, e.g., using the MATLAB function below.

```
% This function yields an angle diff in the interval (−π, π]
% from the difference between two angles th_d and th
% both defined in the interval (−π, π].

function diff=min_angle(th_d,th)
  n_d=[cos(th_d), sin(th_d), 0];
  n=[cos(th), sin(th), 0];
  n_d3=[n_d(1) n_d(2) 0]; n3=[n(1) n(2) 0];
  diff_abs=acos(n*n_d');  % always a positive angle between 0 and π
  diff_sign=cross(n,n_d);  % the third component gives the sign
  if diff_sign(3)>0,
     diff=diff_abs;
  else
     diff=-diff_abs;
  end
end
```

* * * * *